BA-SU-2219-15

WAKE COUNTY
SEP - 2 2015
PLANNING, DEVELOPMENT & INSPECTIONS

WAKE COUNTY
NORTH CAROLINA

SPECIAL USE PERMIT APPLICATION

Submit required documentation to:
Wake County Planning, Development and Inspections
PO Box 550 — Wake County Office Building
Raleigh, NC 27602-0550 — 336 Fayetteville Street Mall, Downtown Raleigh
Contact (919) 856-6335 for additional information.

File #
Fee
Amt Paid
Check #
Rec'd Date
Rec'd By

Complete with required information (write "n/a" if information is not applicable to proposal).

Type of Special Use (be as specific as possible and cite code section listing use as permitted special use)
Telecommunication Facility, 230' monopole permitted under Wake County UDO § 4-56

Modification of previously issued Special Use Permit? (✓)Yes ( )No
If Yes, provide relevant Special Use Permit Number: BA988, obtained on September 3, 1985

Property

Parcel Identification Number: 0780502590
Address: 7109 Ten Ten Road, Apex, North Carolina
Location: North (north, east, south, west) side of Ten Ten Road (street), at/between
Blaney Franks Road (street) and Lake Wheeler Road (street)
Total site area in square feet and acres: _____ square feet 44.8 acres
Zoning District(s) and Overlay Districts (if any) and land area within each: R-40W, unknown land area
List Conditions of any Conditional Use Zoning Districts: n/a

Present land use(s): Telecommunication Facility, 280' lattice tower
How is this proposed use a public necessity?
Approximately half of US households have discontinued use of landlines and rely exclusively on cell phones for communication.
What is impact on surrounding neighborhood and adjacent properties?
None, replacing existing 280' lattice tower with a 230' monopole adjacent to existing tower

Land Owner

Land Owner Name: Barbara S. Cummings
Business Operator Name (if different from Land Owner): _____
Address: 7201 Ten Ten Road
City: Apex State: NC Zip Code: 27539
E-mail Address: _____ Fax: _____
Telephone Number: _____

Applicant (person to whom all correspondence will be sent)

Name: Crown Castle, attn: Mike Chirico

Address: 3530 Toringdon Way, Suite 300

City: Charlotte State: NC Zip Code: 28277

E-mail Address: _____ Fax: _____

Telephone Number: 919-465-3522 Relationship to Owner: Lessee

Proposal

Max. allowable floor area ratio (see applicable zoning district/use regulation): n/a

Proposed total floor area: n/a sf Proposed floor area ratio (floor area/site area): n/a

Max. allowable impervious surface coverage (see applicable zoning district/use regulation) : 12 %

Proposed impervious surfaces area: 0 (work will only be done to the compound) sf

Proposed impervious surface coverage (impervious surfaces area/site area x 100): 0 %

Required transitional bufferyard types and depths (see Article 16):

Front (___) 40 ft Left (___) 40 ft Right (___) 40 ft Rear (___) 40 ft

Proposed transitional bufferyard types and depths (see Article 16):

Front (___) n/a ft Left (___) n/a ft Right (___) n/a ft Rear (___) n/a ft

Min. yard depths (see applicable district/use regulation):

Front 230 ft Corner side n/a ft Side 230 ft Rear 230 ft

Proposed yard depths: Front_____ft Corner side_____ft Side_____ft Rear _____ft

Max. building height (see applicable district/use regulation): n/a ft

Proposed building height: n/a ft

Min. parking space standard (see Article 15): 2 spaces per tower

Min. no. of parking spaces: 2 Proposed no. of parking spaces At least 2

Number of employees: 0 Hours of operation: n/a

Vehicular Access:

Names of access street(s) and number of access points along each: One access point off of Ten Ten Road

Name of access or adjacent street	Right-of-way width (ft)	Pavement width (ft)	No. of lanes	Paved? (Y or N)	Roadway design capacity [1]	Traffic volume (ADT)[2]	Est. traffic generated (ADT)[3]

[1] See NCDOT Highway Capacity Manual or most recent Wake County Thoroughfare Plan Appendix

[2] See CAMPO web site (www.raleigh-nc.org/campo) or NCDOT Traffic Survey Unit

[3] Base on Institute of Transportation Engineers ratios - ratio used for estimate (e.g., x trips per y sf) _____

Estimated traffic generated by heavy vehicles (vehicles other than automobiles and light trucks):

Type of vehicle: n/a ADT: n/a

Type of vehicle: n/a ADT: n/a

Utilities and Services:

Water supply provided by: ( ) municipal system : _____

( ) community system – specify type: _____ ( ) individual well(s)

Est. total water demand: _____ gpd

Wastewater collection/treatment provided by: ( ) municipal system: _____

( ) community system – specify type: _____

( ) individual on-site system

Est. total wastewater discharge: _____ gpd

Solid waste collection provided by: _____

Electrical service provided by: _____ Underground ( ) yes ( ) no

Natural gas service provided by: _____

Telephone service provided by: _____ Underground ( ) yes ( ) no

Cable television service provided by: _____ Underground ( ) yes ( ) no

Fire protection provided by: _____

Miscellaneous:

Generalized slope of site 1%-2% slope along compound; no change to existing slope

Valuable natural features (rare plant community, wildlife habitat, lake, stream, geology, etc.) on or adjoining site: _____

Valuable historic resources (homestead, mill, archeological site) on or adjoining site: _____

Land Use Plan Classifications

General Classification (note associated municipality and/or watershed):

( ) Short-Range Urban Services Area/Water Supply Watershed _____

( ) Short-Range Urban Services Area _____

( ) Long-Range Urban Services Area/Water Supply Watershed _____

( ) Long-Range Urban Services Area _____

(✓) Non-Urban Area/Water Supply Watershed Swift Creek

( ) Non-Urban Area

Land Use Classification(s) (Note Area Land Use Plan, if applicable):

Rural Non-Urban

Applicant's statement of compliance with county, municipal and joint Land Use Plans (How is proposal consistent with Land Use Plan objectives for planning area, Land Use classification, activity centers, locational standards and transitional urban development standards?)

The site is within the Swift Creek Land Management Plan, Wake County jurisdiction. The planning objectives for this planning area are listed in chapter V, section G of the Wake County Land Use Plan. In this planning area, non-residential development is allowed, but is "not intended to be major commercial or employment areas." As such, the proposed use of a Telecommunication Facility is consistent with the Land Use Plan for this property.

Other information (additional relevant information about the site or proposal you wish to note or cite)

The proposed project is simply to remove a 280' lattice tower and replace it with a 230' monopole. The replacement tower will be similar to the existing tower, except it will be 50' shorter and have a smaller footprint than the existing tower.

All property owners must sign this application unless one or more individuals are specifically authorized to act as an agent on behalf of the collective interest of some or all of the owners (provide a copy of such authorization).

The undersigned property owner(s) hereby authorize the filing of this application (and any subsequent revisions thereto). The filing of this application authorizes the Wake County staff to enter upon the site to conduct relevant site inspections as deemed necessary to process the application.

Signature: (agent) Date: 9/4/15

Signature: Date:

Signature: Date:

The undersigned applicant hereby certifies that, to the best of his or her knowledge and belief, all information supplied with this application is true and accurate.

Signature: Date: 9/1/15

Notes: All documents and maps submitted as required become the property of Wake County.
The Wake County Unified Development Ordinance is on the web at www.wakegov.com.

Statement of Justification

Special Use Permit for Replacement of an Existing Telecommunication Facility

7109 Ten Ten Road
Apex, NC 27502

I. Introduction and Overview

Crown Castle International ("Crown" or "Applicant") is requesting a special use permit to replace an existing, 280' lattice Telecommunication Facility with a 230' monopole Telecommunication Facility. The existing tower is located on a portion of 7109 Ten Ten Road, Apex, NC 28110, parcel number 0780502590 (the "Site").

Crown is a leading independent owner and operator of shared wireless infrastructures, including extensive networks of towers.

The existing lattice tower is 280' in height and Verizon has its antenna located at the top of the tower. The new equipment needed to keep pace with advancing technology is heavier than the existing tower can support. Therefore, Crown is seeking this permit to remove the existing lattice tower and erect a new 230' monopole that will be able to support the new equipment. The new tower would be contained entirely within the existing tower compound.

II. Justification

1. The use will not materially endanger the public health or safety.

Wireless communications services have become a vital feature of public safety and serve the general welfare. This has been demonstrated by emergencies both at the national and regional level. When landline telephone service has been interrupted, public and emergency service providers rely on wireless service to communicate and respond to emergencies. The Federal Communications Commission reports that slightly more than half of all United States citizens live in wireless-only households and rely exclusively on cell phones.

The proposed 230' tower on the Site will meet all required setback and fall zone criteria. The proposed tower will fully comply with all FCC rules and standards regarding maximum permissible exposure to radio frequency emissions and public safety.

Because the application is to replace an already existing tower, there will be no negative impacts to traffic, the provision of services and utilities, soil erosion and sedimentation, or public, community, or private water supplies. The only earthwork required for the site will be to widen the current 12' access road off of Ten Ten Road to 20'. The Site will not require any water or sewer services.

2. <u>The use meets all required special uses and specifications.</u>

As indicated by the application and site plan, the proposed tower will conform with all standards applicable to properties zoned Residential-40 Watershed District (R-40W) under the Wake County Unified Development Ordinance (the "UDO"). Freestanding Telecommunication Facilities that are 200' or greater are permitted in the R-40W zoning district as a special use.

The proposed use will comply with all technical requirements established by the UDO.

Setbacks. The R-40W district requires minimum front and rear setbacks of 30' and side setbacks of 15'. Setbacks for Telecommunication Facilities are required to be at least equal to the tower's height. The proposed cell tower is a 230' monopole, 50' shorter than the existing 280' lattice cell tower, which currently meets the setback requirements of the UDO. The proposed cell tower will continue to meet the setback requirements and is more than 230' from an adjoining parcel of land or road. These distances are measured from the outside dimensions of the tower, not from the guy anchors.

Fall Zone. As indicated above, the tower will be setback at least 230' from an adjoining parcel of land or road and will fall within the tower site. The monopole is designed to break in the middle in the event of a structural failure, so the tower will fall a much shorter distance than it is setback from adjoining parcels and roads. These distances are measured from the outside dimensions of the tower, not from the guy anchors.

Ability to Co-Locate. The tower is greater than 180' feet in height, therefore it is required under the UDO to accommodate at least three (3) additional telecommunication users. The proposed monopole will meet this requirement. The current 280' lattice tower does not have the structural ability to allow for co-location.

Fence. An existing 8' tall chain link fence currently surrounds the telecommunications tower and equipment, and will continue to surround the proposed tower. In addition, a solid fence will surround the compound to shield the compound from view.

Landscape Screening. Existing tree lines to the north, west, and east screen the compound from public streets and adjoining parcels of land. On the south side, crops grown on the parcel screen the compound from view. The replacement monopole will not affect the visibility of the compound and will greatly lessen vertical visual impacts, as it is 50' shorter than the existing tower and the monopole design is less obtrusive than the lattice design of the existing tower.

Buffer. There is an existing mature tree line along the inside perimeter of the parcel blocking the view of the compound from the properties to the north, west, and east. The south side of the compound is approximately 800' off of Ten Ten Road and is blocked from view by crops grown on the parcel.

Reception Interference. The proposed tower will not disturb or diminish any radio, television, or other electromagnetic transmission or reception on other properties.

FAA Standards. The current 280' tower meets FAA standards for avoiding obstruction of navigable airspace and approaches to public airports and for marking and lighting structures to promote aviation safety. The proposed 230' tower will continue to meet these standards.

FCC Standards. The output of the proposed tower will meet the minimum standards of the FCC relating to the environmental effects of radio frequency emissions.

Employment Center. Buildings associated with the proposed tower will not be used as an employment center in compliance with the requirements for towers located in a Residential district.

Decommissioning Plan. See the Decommission Plan submitted with the SUP permit application, which addresses all items listed in the UDO. The Decommissioning Plan will be recorded with the Register of Deeds before all required final inspections are completed.

3. <u>The use will not substantially injure the value of adjoining or abutting property.</u>

The existing 280' lattice tower has been in place for approximately thirty years. It is located on a 44.8 acre parcel of land. The tower complies with all required setbacks and was constructed in compliance with the special use permit issued by Wake County on September 3, 1985. The proposed monopole will be 50' shorter than the existing lattice tower. It will be built immediately adjacent to the existing tower and will be entirely within the existing compound, so there will be no increase in the footprint of the Site. All of the property surrounding the Site is zoned Residential R-40W or R-30 and is largely undeveloped. Therefore, there is no reason to believe that the proposed tower will have any effect on the surrounding property.

4. <u>The location and character of the use will be in harmony with the area in which it is to be located.</u>

The Site is zoned R-40W under the UDO. Telecommunication Facilities 200' or greater are permitted in R-40W districts with a special use permit. Crown is sensitive to the placement of towers and selected this Site in an effort to minimize the visual impact to the surrounding area. All of the property surrounding the Site is zoned Residential R-40W or R-30 and is largely undeveloped. Consequently, the location and character of the proposed tower is in harmony with the surrounding area.

5. <u>The use will be consistent with the Wake County Land Use Plan.</u>

The Site is within the Swift Creek Land Management Plan, Wake County jurisdiction section of the Wake County Land Use Plan (the "LUP"). In this planning

area, non-residential development is allowed, but is "not intended to be major commercial or employment areas." See LUP, Chap. V, § G. The proposed cell tower is not a major commercial or employment area. As such, the continued use of a Telecommunication Facility is consistent with the objectives of the LUP.

CROWN CASTLE

3530 TORINGDON WAY, STE 300
CHARLOTTE, NC 28277

CROWN SITE ID: 816290
CROWN SITE NAME:
WYYD

LOCATION MAP

LATITUDE	N 35° 40' 32.075" *
LONGITUDE	W 78° 42' 52.196" *

GROUND ELEV. (AMSL) = 435'

*INFORMATION PROVIDED BY CROWN CASTLE

TOWER COORDINATES

ALL WORK AND MATERIALS SHALL BE PERFORMED AND INSTALLED IN ACCORDANCE WITH THE CURRENT EDITIONS OF THE FOLLOWING CODES AS ADOPTED BY THE LOCAL GOVERNING AUTHORITES. NOTHING IN THESE PLANS IS TO BE CONSTRUED TO PERMIT WORK NOT CONFORMING TO THE LATEST EDITIONS OF THE FOLLOWING:

1. NORTH CAROLINA BUILDING CODE (2012 EDITION)
2. NORTH CAROLINA CODE COUNCIL
3. ANSI/TIA-222-G-2009
4. 2012 NCEC (NEC 2011 & ADDENDUM)
5. LOCAL BUILDING CODE
6. CITY/COUNTY ORDINANCES

CODE COMPLIANCE

POWER COMPANY:	DUKE ENERGY	TELEPHONE COMPANY:	VERIZON
CONTACT:	CUSTOMER SERVICE	CONTACT:	CUSTOMER SERVICE
PHONE:	(800) 452-2777	PHONE:	(800)-483-2000
METER # NEAR SITE:	UNKNOWN	PHONE # NEAR SITE:	UNKNOWN
		PEDESTAL # NEAR SITE:	UNKNOWN

UTILITY INFORMATION

FROM CHARLOTTE, NC: TAKE I-85 N TOWARD GREENSBORO. TAKE EXIT 128A TO MERGE ONTO US-421 S TOWARD SANFORD. TAKE EXIT 171 FOR US-64 TOWARD SILER CITY/PITTSBORO. TURN LEFT ONTO US-64 E. TAKE EXIT TOWARD APEX/DOWNTOWN. TURN RIGHT ONTO N SALEM ST. TURN LEFT ONTO APEX PEAKWAY. TURN LEFT ONTO CENTER ST/OLD TEN TEN ROAD. ARRIVE AT SITE ON YOUR LEFT, 7190 TEN TEN ROAD.

DRIVING DIRECTIONS

CROWN SITE ID:	813248	SITE ADDRESS:	7109 TEN TEN ROAD APEX, NC 27502 (WAKE COUNTY)
CROWN SITE NAME:	WYYD	JURISDICTION:	WAKE COUNTY
PROJECT DESCRIPTION:	REMOVE AND REPLACE EXISTING TOWER	PRESENT OCCUPANCY TYPE:	TELECOMMUNICATIONS FACILITY
TOWER TYPE:	230' MONOPOLE TOWER	CURRENT ZONING:	R-40W
		PARCEL NUMBER:	0780502590

PROJECT INFORMATION

LESSEE:
NAME: VERIZON WIRELESS
ADDRESS: UNKNOWN
CITY, STATE, ZIP: UNKNOWN
CONTACT: UNKNOWN
PHONE: UNKNOWN

TOWER OWNER:
NAME: CROWN CASTLE
ADDRESS: 3530 TORINGDON WAY, SUITE 300
CITY, STATE, ZIP: CHARLOTTE, NC 28277
CONTACT: MIKE CHIRICO
PHONE: (919) 465-3522

SURVEYOR:
NAME: N/A
ADDRESS: N/A
CITY, STATE, ZIP: N/A
CONTACT: N/A
PHONE: N/A

CIVIL ENGINEER:
NAME: TOWER ENGINEERING PROFESSIONALS
ADDRESS: 326 TRYON ROAD
CITY, STATE, ZIP: RALEIGH, NC 27603
CONTACT: GRAHAM M. ANDRES, P.E.
PHONE: (919) 661-6351

ELECTRICAL ENGINEER:
NAME: TOWER ENGINEERING PROFESSIONALS
ADDRESS: 326 TRYON ROAD
CITY, STATE, ZIP: RALEIGH, NC 27603
CONTACT: MARK S. QUAKENBUSH, P.E.
PHONE: (919) 661-6351

PROPERTY OWNER:
NAME: BARBARA S. CUMMINGS
ADDRESS: 7201 TEN TEN ROAD
CITY, STATE, ZIP: APEX, NC 27539
CONTACT: UNKNOWN
PHONE: UNKNOWN

CONTACT INFORMATION

SHEET:	DESCRIPTION:	REV
T-1	TITLE SHEET	2
T-2	APPENDIX B	2
C-1	SITE PLAN & TOWER ELEVATION	2
C-2	CIVIL DETAILS	2
E-1	ELECTRICAL NOTES, GROUND PLAN & DETAILS	2
E-2	GROUNDING DETAILS	2

SHEET INDEX

1. ALL REFERENCES TO THE OWNER IN THESE DOCUMENTS SHALL BE CONSIDERED VERIZON OR ITS DESIGNATED REPRESENTATIVE.
2. ALL WORK PRESENTED ON THESE DRAWINGS MUST BE COMPLETED BY THE CONTRACTOR UNLESS NOTED OTHERWISE. THE CONTRACTOR MUST HAVE CONSIDERABLE EXPERIENCE IN PERFORMANCE OF WORK SIMILAR TO THAT DESCRIBED HEREIN. BY ACCEPTANCE OF THIS ASSIGNMENT, THE CONTRACTOR IS ATTESTING THAT HE DOES HAVE SUFFICIENT EXPERIENCE AND ABILITY, THAT HE IS KNOWLEDGEABLE OF THE WORK TO BE PERFORMED AND THAT HE IS PROPERLY LICENSED AND PROPERLY REGISTERED TO DO THIS WORK IN THE STATE OF NORTH CAROLINA.
3. WORK SHALL BE COMPLETED IN ACCORDANCE WITH THE 2012 NORTH CAROLINA BUILDING CODE.
4. UNLESS SHOWN OR NOTED OTHERWISE ON THE CONTRACT DRAWINGS, OR IN THE SPECIFICATIONS, THE FOLLOWING NOTES SHALL APPLY TO THE MATERIALS LISTED HEREIN, AND TO THE PROCEDURES TO BE USED ON THIS PROJECT.
5. ALL HARDWARE ASSEMBLY MANUFACTURER'S INSTRUCTIONS SHALL BE FOLLOWED EXACTLY AND SHALL SUPERSEDE ANY CONFLICTING NOTES ENCLOSED HEREIN.
6. IT IS THE CONTRACTOR'S SOLE RESPONSIBILITY TO DETERMINE ERECTION PROCEDURE AND SEQUENCE TO INSURE THE SAFETY OF THE STRUCTURE AND IT'S COMPONENT PARTS DURING ERECTION AND/OR FIELD MODIFICATIONS. THIS INCLUDES, BUT IS NOT LIMITED TO, THE ADDITION OF TEMPORARY BRACING, GUYS OR TIE DOWNS THAT MAY BE NECESSARY. SUCH MATERIAL SHALL BE REMOVED AND SHALL REMAIN THE PROPERTY OF THE CONTRACTOR AFTER THE COMPLETION OF THE PROJECT.
7. ALL DIMENSIONS, ELEVATIONS, AND EXISTING CONDITIONS SHOWN ON THE DRAWINGS SHALL BE FIELD VERIFIED BY THE CONTRACTOR PRIOR TO BEGINNING ANY MATERIALS ORDERING, FABRICATION OR CONSTRUCTION WORK ON THIS PROJECT. CONTRACTOR SHALL NOT SCALE CONTRACT DRAWINGS IN LIEU OF FIELD VERIFICATIONS. ANY DISCREPANCIES SHALL BE IMMEDIATELY BROUGHT TO THE ATTENTION OF THE OWNER AND THE OWNER'S ENGINEER. THE DISCREPANCIES MUST BE RESOLVED BEFORE THE CONTRACTOR IS TO PROCEED WITH THE WORK. THE CONTRACT DOCUMENTS DO NOT INDICATE THE METHOD OF CONSTRUCTION. THE CONTRACTOR SHALL SUPERVISE AND DIRECT THE WORK AND SHALL BE SOLELY RESPONSIBLE FOR ALL CONSTRUCTION MEANS, METHODS, TECHNIQUES, SEQUENCES, AND PROCEDURES. OBSERVATION VISITS TO THE SITE BY THE OWNER AND/OR THE ENGINEER SHALL NOT INCLUDE INSPECTION OF THE PROTECTIVE MEASURES OR THE PROCEDURES.
8. ALL MATERIALS AND EQUIPMENT FURNISHED SHALL BE NEW AND OF GOOD QUALITY, FREE FROM FAULTS AND DEFECTS AND IN CONFORMANCE WITH THE CONTRACT DOCUMENTS. ANY AND ALL SUBSTITUTIONS MUST BE PROPERLY APPROVED AND AUTHORIZED IN WRITING BY THE OWNER AND ENGINEER PRIOR TO INSTALLATION. THE CONTRACTOR SHALL FURNISH SATISFACTORY EVIDENCE AS TO THE KIND AND QUALITY OF THE MATERIALS AND EQUIPMENT BEING SUBSTITUTED.
9. THE CONTRACTOR SHALL BE RESPONSIBLE FOR INITIATING, MAINTAINING, AND SUPERVISING ALL SAFETY PRECAUTIONS AND PROGRAMS IN CONNECTION WITH THE WORK. THE CONTRACTOR IS RESPONSIBLE FOR ENSURING THAT THIS PROJECT AND RELATED WORK COMPLIES WITH ALL APPLICABLE LOCAL, STATE, AND FEDERAL SAFETY CODES AND REGULATIONS GOVERNING THIS WORK.
10. ACCESS TO THE PROPOSED WORK SITE MAY BE RESTRICTED. THE CONTRACTOR SHALL COORDINATE INTENDED CONSTRUCTION ACTIVITY, INCLUDING WORK SCHEDULE AND MATERIALS ACCESS, WITH THE RESIDENT LEASING AGENT FOR APPROVAL.
11. ALL PERMITS THAT MUST BE OBTAINED ARE THE RESPONSIBILITY OF THE CONTRACTOR. THE CONTRACTOR WILL BE RESPONSIBLE FOR ABIDING BY ALL CONDITIONS AND REQUIREMENTS OF THE PERMITS.
12. IF APPLICABLE, ALL CONCRETE WORK SHALL COMPLY TO LOCAL CODES AND THE ACI 318-11, "BUILDING REQUIREMENTS FOR STRUCTURAL CONCRETE".
13. 24 HOURS PRIOR TO THE BEGINNING OF ANY CONSTRUCTION, THE CONTRACTOR MUST NOTIFY THE APPLICABLE JURISDICTIONAL (STATE, COUNTY OR CITY) ENGINEER.
14. ALL MATERIALS AND WORKMANSHIP SHALL BE WARRANTED FOR ONE YEAR FROM ACCEPTANCE DATE.
15. ALL TOWER DIMENSIONS SHALL BE VERIFIED WITH THE PLANS (LATEST REVISION) PRIOR TO COMMENCING CONSTRUCTION. NOTIFY THE ENGINEER IMMEDIATELY IF ANY DISCREPANCIES ARE DISCOVERED. THE OWNER SHALL HAVE A SET OF APPROVED PLANS AVAILABLE AT THE SITE AT ALL TIMES WHILE WORK IS BEING PERFORMED. A DESIGNATED RESPONSIBLE EMPLOYEE SHALL BE AVAILABLE FOR CONTACT BY GOVERNING AGENCY INSPECTORS.
16. ALL TOWER MODIFICATION WORK SHALL BE IN ACCORDANCE WITH TIA-1019-A STANDARD FOR INSTALLATION, ALTERATION AND MAINTENANCE OF ANTENNA SUPPORTING STRUCTURES AND ANTENNAS.
17. NO HAZARDOUS MATERIALS IN REPORTABLE QUANTITIES WILL BE USED OR STORED ON-SITE.

GENERAL NOTES

PLANS PREPARED FOR:
CROWN CASTLE
3530 TORINGDON WAY, ST 300
CHARLOTTE, NC 28277

PLANS PREPARED BY:
TOWER ENGINEERING PROFESSIONALS
326 TRYON ROAD
RALEIGH, NC 27603
OFFICE: (919) 661-6351
FAX: (919) 661-6350
N.C. LICENSE # C-1734

SEAL:
NORTH CAROLINA PROFESSIONAL ENGINEER SEAL 039734 GRAHAM M. ANDRES
September 2, 2015

REV	DATE	
2	08-02-15	CONSTRUCTION
1	03-24-15	CONSTRUCTION
0	03-20-15	PRELIMINARY

ISSUED FOR:
DRAWN BY: MAW
CHECKED BY: SQB

PROJECT INFORMATION:
WWYD
VZW ID: 29077
CROWN ID: 816290
7109 TEN TEN ROAD
APEX, NC 27502
(WAKE COUNTY)

SHEET TITLE:
TITLE SHEET

SHEET NUMBER: T-1
REVISION: 2
TEP #: 3341.15

2012 APPENDIX B
BUILDING CODE SUMMARY
FOR ALL COMMERCIAL PROJECTS
(EXCEPT 1 AND 2-FAMILY DWELLINGS AND TOWNHOUSES)
(Reproduce the following data on the building plans sheet 1 or 2)

Name of Project: SITE NAME WWYD - VERIZON # 29077 - CROWN # 816290
Address: 7109 TEN TEN RD APEX, NC 27502 Zip Code 27502
Proposed Use: TELECOMMUNICATIONS TOWER
Owner/Authorized Agent: [illegible] Phone # (919) [illegible] E-Mail [illegible]
Owned By: ☐ City/County ☒ Private ☐ State
Code Enforcement Jurisdiction: ☐ City ☒ County WAKE ☐ State

LEAD DESIGN PROFESSIONAL: Kimberly S. Martin [illegible] (919) 661-6351 [illegible]

DESIGNER	FIRM	NAME	LICENSE #	TELEPHONE #	E-MAIL
Architectural				( )	
Civil	Tower Engineering Professionals	Graham M. Andres	035734	(919) 661-6351	[illegible]
Electrical	Tower Engineering Professionals	Mark S. Quakenbush	[illegible]	(919) 661-6351	[illegible]
Fire Alarm				( )	
Plumbing				( )	
Mechanical				( )	
Sprinkler-Standpipe				( )	
Structural				( )	
Retaining Walls >5' High				( )	
Other				( )	

2012 EDITION OF NC CODE FOR: ☒ New Construction ☐ Addition ☐ Upfit
EXISTING: ☐ Reconstruction ☐ Alteration ☐ Repair ☐ Renovation
CONSTRUCTED: (date) ____ ORIGINAL USE(S) (Ch. 3): ____
RENOVATED: (date) ____ CURRENT USE(S) (Ch. 3): ____
PROPOSED USE(S) (Ch. 3): ____

BASIC BUILDING DATA N/A - NO PROPOSED BUILDINGS - TOWER CONSTRUCTION ONLY
Construction Type: (check all that apply) ☐ I-A ☐ I-B ☐ II-A ☒ II-B ☐ III-A ☐ III-B ☐ IV ☐ V-A ☐ V-B
Sprinklers: ☐ No ☐ Partial ☐ Yes ☐ NFPA 13 ☐ NFPA 13R ☐ NFPA 13D
Standpipes: ☐ No ☐ Yes Class ☐ I ☐ II ☐ III ☐ Wet ☐ Dry
Fire District: ☐ No ☐ Yes (Primary) Flood Hazard Area: ☐ No ☐ Yes
Building Height: (feet) ____
Gross Building Area:

FLOOR	EXISTING (SQ FT)	NEW (SQ FT)	SUB-TOTAL
6th Floor		N/A	
5th Floor			
4th Floor			
3rd Floor			
2nd Floor			
Mezzanine			
1st Floor		N/A	
Basement		N/A	
TOTAL		N/A	

N/A NOT A BUILDING

2012 NC Administrative Code and Policies

ALLOWABLE AREA

Occupancy:
Assembly ☐ A-1 ☐ A-2 ☐ A-3 ☐ A-4 ☐ A-5
Business ☐
Educational ☐
Factory ☐ F-1 Moderate ☐ F-2 Low
Hazardous ☐ H-1 Detonate ☐ H-2 Deflagrate ☐ H-3 Combust ☐ H-4 Health ☐ H-5 HPM
Institutional ☐ I-1 ☐ I-2 ☐ I-3 ☐ I-4
I-3 Condition ☐ 1 ☐ 2 ☐ 3 ☐ 4 ☐ 5
Mercantile ☐
Residential ☐ R-1 ☐ R-2 ☐ R-3 ☐ R-4
Storage ☐ S-1 Moderate ☐ S-2 Low ☐ High-piled
☐ Parking Garage ☐ Open ☐ Enclosed ☐ Repair Garage
Utility and Miscellaneous ☒

Accessory Occupancies:
Assembly ☐ A-1 ☐ A-2 ☐ A-3 ☐ A-4 ☐ A-5
Business ☐
Educational ☐
Factory ☐ F-1 Moderate ☐ F-2 Low
Hazardous ☐ H-1 Detonate ☐ H-2 Deflagrate ☐ H-3 Combust ☐ H-4 Health ☐ H-5 HPM
Institutional ☐ I-1 ☐ I-2 ☐ I-3 ☐ I-4
I-3 Condition ☐ 1 ☐ 2 ☐ 3 ☐ 4 ☐ 5
Mercantile ☐
Residential ☐ R-1 ☐ R-2 ☐ R-3 ☐ R-4
Storage ☐ S-1 Moderate ☐ S-2 Low ☐ High-piled
☐ Parking Garage ☐ Open ☐ Enclosed ☐ Repair Garage
Utility and Miscellaneous ☐

Incidental Uses (Table 508.2.5):
☐ Furnace room where any piece of equipment is over 400,000 Btu per hour input
☐ Rooms with boilers where the largest piece of equipment is over 15 psi and 10 horsepower
☐ Refrigerant machine room
☐ Hydrogen cutoff rooms, not classified as Group H
☐ Incinerator rooms
☐ Paint shops, not classified as Group H, located in occupancies other than Group F
☐ Laboratories and vocational shops, not classified as Group H, located in a Group E or I-2 occupancy
☐ Laundry rooms over 100 square feet
☐ Group I-3 cells equipped with padded surfaces
☐ Group I-2 waste and linen collection rooms
☐ Waste and linen collection rooms over 100 square feet
☐ Stationary storage battery systems having a liquid electrolyte capacity of more than 50 gallons, or a lithium-ion capacity of 1,000 pounds used for facility standby power, emergency power or uninterrupted power supplies
☐ Rooms containing fire pumps
☐ Group I-2 storage rooms over 100 square feet
☐ Group I-2 commercial kitchens
☐ Group I-2 laundries equal to or less than 100 square feet
☐ Group I-2 rooms or spaces that contain fuel-fired heating equipment

Special Uses: ☐ 402 ☐ 403 ☐ 404 ☐ 405 ☐ 406 ☐ 407 ☐ 408 ☐ 409 ☐ 410 ☐ 411 ☐ 412 ☐ 413 ☐ 414 ☐ 415 ☐ 416 ☐ 417 ☐ 418 ☐ 419 ☐ 420 ☐ 421 ☐ 422 ☐ 423 ☐ 424 ☐ 425 ☐ 426 ☐ 427
Special Provisions: ☐ 509.2 ☐ 509.3 ☐ 509.4 ☐ 509.5 ☐ 509.6 ☐ 509.7 ☐ 509.8 ☐ 509.9
Mixed Occupancy: ☒ No ☐ Yes Separation: ____ Hr. Exception: ____
☐ Incidental Use Separation (508.2.5)

N/A NOT A BUILDING

2012 NC Administrative Code and Policies

This separation is not exempt as a Non-Separated Use (see exceptions).
☐ Non-Separated Use (508.3)
The required type of construction for the building shall be determined by applying the height and area limitations for each of the applicable occupancies to the entire building. The most restrictive type of construction, so determined, shall apply to the entire building.
☐ Separated Use (508.4) - See below for area calculations
For each story, the area of the occupancy shall be such that the sum of the ratios of the actual floor area of each use divided by the allowable floor area for each use shall not exceed 1.

Actual Area of Occupancy A / Allowable Area of Occupancy A + Actual Area of Occupancy B / Allowable Area of Occupancy B ≤ 1

N/A + N/A + ___ = N/A ≤ 1.00

STORY NO.	DESCRIPTION AND USE	(A) BLDG AREA PER STORY (ACTUAL)	(B) TABLE 503[1] AREA	(C) AREA FOR FRONTAGE INCREASE[1,5]	(D) AREA FOR SPRINKLER INCREASE[4]	(E) ALLOWABLE AREA OR UNLIMITED[2,3]	(F) MAXIMUM BUILDING AREA[4]

[1] Frontage area increases from Section 506.2 are computed thus:
a. Perimeter which fronts a public way or open space having 20 feet minimum width = ____ (F)
b. Total Building Perimeter = ____ (P)
c. Ratio (F/P) = ____ (F/P)
d. W = Minimum width of public way = ____ (W)
e. Percent of frontage increase I_f = 100 [F/P - 0.25] x W/30 = ____ (%)
[2] The sprinkler increase per Section 506.3 is as follows:
a. Multi-story building I_s = 200 percent
b. Single story building I_s = 300 percent
[3] Unlimited area applicable under conditions of Section 507.
[4] Maximum Building Area = total number of stories in the building x D (506.4).
[5] The maximum area of open parking garages must comply with Table 406.5.4. The maximum area of air traffic control towers must comply with Table 412.3.1.2.

ALLOWABLE HEIGHT

	ALLOWABLE (TABLE 503)	INCREASE FOR SPRINKLERS	SHOWN ON PLANS	CODE REFERENCE
Type of Construction			Type ____	
Building Height in Feet		Feet = H + 20' = ____		
Building Height in Stories		Stories + 1 = ____		

N/A NOT A BUILDING

2012 NC Administrative Code and Policies

FIRE PROTECTION REQUIREMENTS

BUILDING ELEMENT	FIRE SEPARATION DISTANCE (FEET)	REQ'D	RATING PROVIDED (W/ ___ REDUCTION)	DETAIL # AND SHEET #	DESIGN # FOR RATED ASSEMBLY	DESIGN # FOR RATED PENETRATION	DESIGN # FOR RATED JOINTS
Structural Frame, including columns, girders, trusses							
Bearing Walls							
Exterior							
North							
East							
West							
South							
Interior							
Nonbearing Walls and Partitions							
Exterior walls							
North							
East							
West							
South							
Interior walls and partitions							
Floor Construction Including supporting beams and joists							
Roof Construction Including supporting beams and joists							
Shaft Enclosures - Exit							
Shaft Enclosures - Other							
Corridor Separation							
Occupancy Separation							
Party/Fire Wall Separation							
Smoke Barrier Separation							
Tenant Separation							
Incidental Use Separation							

* Indicate section number permitting reduction

N/A NOT A BUILDING

LIFE SAFETY SYSTEM REQUIREMENTS

Emergency Lighting: ☐ No ☐ Yes
Exit Signs: ☐ No ☐ Yes
Fire Alarm: ☐ No ☐ Yes
Smoke Detection Systems: ☐ No ☐ Yes ☐ Partial ____
Panic Hardware: ☐ No ☐ Yes

LIFE SAFETY PLAN REQUIREMENTS

Life Safety Plan Sheet #: ____
☐ Fire and/or smoke rated wall locations (Chapter 7)
☐ Assumed and real property line locations

2012 NC Administrative Code and Policies

☐ Exterior wall opening area with respect to distance to assumed property lines (705.8)
☐ Existing structures within 30' of the proposed building
☐ Occupancy types for each area as it relates to occupant load calculation (Table 1004.1.1)
☐ Occupant loads for each area
☐ Exit access travel distances (1016)
☐ Common path of travel distances (1014.3 & 1028.8)
☐ Dead end lengths (1018.4)
☐ Clear exit widths for each exit door
☐ Maximum calculated occupant load capacity each exit door can accommodate based on egress width (1005.1)
☐ Actual occupant load for each exit door
☐ A separate schematic plan indicating where fire rated floor/ceiling and/or roof structure is provided for purposes of occupancy separation
☐ Location of doors with panic hardware (1008.1.10)
☐ Location of doors with delayed egress locks and the amount of delay (1008.1.9.7)
☐ Location of doors with electromagnetic egress locks (1008.1.9.8)
☐ Location of doors equipped with hold-open devices
☐ Location of emergency escape windows (1029)
☐ The square footage of each fire area (902)
☐ The square footage of each smoke compartment (407.4)
☐ Note any code exceptions or table notes that may have been utilized regarding the items above

N/A NOT A BUILDING

ACCESSIBLE DWELLING UNITS
(SECTION 1107)

TOTAL UNITS	ACCESSIBLE UNITS REQUIRED	ACCESSIBLE UNITS PROVIDED	TYPE A UNITS REQUIRED	TYPE A UNITS PROVIDED	TYPE B UNITS REQUIRED	TYPE B UNITS PROVIDED	TOTAL ACCESSIBLE UNITS PROVIDED

ACCESSIBLE PARKING
(SECTION 1106)

LOT OR PARKING AREA	TOTAL # OF PARKING SPACES REQUIRED	TOTAL # OF PARKING SPACES PROVIDED	# OF ACCESSIBLE SPACES PROVIDED: REGULAR WITH 5' ACCESS AISLE	VAN SPACES WITH 132" ACCESS AISLE	VAN SPACES WITH 8' ACCESS AISLE	TOTAL # ACCESSIBLE PROVIDED
TOTAL						

STRUCTURAL DESIGN

DESIGN LOADS:
Importance Factors: Wind (Iw) ____ Snow (Is) ____ Seismic (Ie) ____
Live Loads: Roof ____ psf Mezzanine ____ psf Floor ____ psf
Ground Snow Load: ____ psf

SEE TOWER DESIGN DRAWINGS FROM MANUFACTURER

2012 NC Administrative Code and Policies

Wind Loads: Basic Wind Speed ____ mph (ASCE-7)
Exposure Category ____
Wind Base Shears (for MWFRS) Vx = ____ Vy = ____

SEISMIC DESIGN CATEGORY: ☐ A ☐ B ☐ C ☐ D
Provide the following Seismic Design Parameters:
Occupancy Category (Table 1604.5) ☐ I ☐ II ☐ III ☐ IV
Spectral Response Acceleration S_s ____ %g S_1 ____ %g
Site Classification (Table 1613.5.2) ☐ A ☐ B ☐ C ☐ D ☐ E ☐ F
Data Source: ☐ Field Test ☐ Presumptive ☐ Historical Data
Basic structural system (check one)
☐ Bearing Wall ☐ Dual w/Special Moment Frame
☐ Building Frame ☐ Dual w/Intermediate R/C or Special Steel
☐ Moment Frame ☐ Inverted Pendulum
Seismic base shear: V_x = ____ V_y = ____
Analysis Procedure: ☐ Simplified ☐ Equivalent Lateral Force ☐ Dynamic
Architectural, Mechanical, Components anchored? ☐ Yes ☐ No

LATERAL DESIGN CONTROL: Earthquake ☐ Wind ☐

SOIL BEARING CAPACITIES:
Field Test (provide copy of test report) ____ psf
Presumptive Bearing capacity ____ psf
Pile size, type, and capacity ____

SPECIAL INSPECTIONS REQUIRED: ☐ Yes ☐ No

SEE TOWER DESIGN DRAWINGS FROM MANUFACTURER

PLUMBING FIXTURE REQUIREMENTS
(TABLE 2902.1)

USE		WATERCLOSETS MALE	WATERCLOSETS FEMALE	URINALS	LAVATORIES MALE	LAVATORIES FEMALE	SHOWERS/TUBS	DRINKING FOUNTAINS REGULAR	DRINKING FOUNTAINS ACCESSIBLE
SPACE	EXISTING								
	NEW	N/A							
	REQUIRED								

SPECIAL APPROVALS

Special approval: (Local Jurisdiction, Department of Insurance, OSC, DPI, DHHS, ICC, etc., describe below)

N/A

N/A NOT A BUILDING

2012 NC Administrative Code and Policies

ENERGY SUMMARY

ENERGY REQUIREMENTS:
The following data shall be considered minimum and any special attribute required to meet the energy code shall also be provided. Each Designer shall furnish the required portions of the project information for the plan data sheet. If performance method, state the annual energy cost for the standard reference design vs annual energy cost for the proposed design.

Climate Zone: ☐ 3 ☐ 4 ☐ 5

Method of Compliance:
☐ Prescriptive (Energy Code)
☐ Performance (Energy Code)
☐ Prescriptive (ASHRAE 90.1)
☐ Performance (ASHRAE 90.1)

THERMAL ENVELOPE

Roof/ceiling Assembly (each assembly)
Description of assembly: ____
U-Value of total assembly: ____
R-Value of insulation: ____
Skylights in each assembly: ____
U-Value of skylight: ____
total square footage of skylights in each assembly: ____

Exterior Walls (each assembly)
Description of assembly: ____
U-Value of total assembly: ____
R-Value of insulation: ____
Openings (windows or doors with glazing)
U-Value of assembly: ____
Solar heat gain coefficient: ____
projection factor: ____
Door R-Values: ____

Walls below grade (each assembly)
Description of assembly: ____
U-Value of total assembly: ____
R-Value of insulation: ____

Floors over unconditioned space (each assembly)
Description of assembly: ____
U-Value of total assembly: ____
R-Value of insulation: ____

Floors slab on grade
Description of assembly: ____
U-Value of total assembly: ____
R-Value of insulation: ____
Horizontal/vertical requirement: ____
slab heated: ____

N/A NOT A BUILDING

2012 NC Administrative Code and Policies

MECHANICAL SUMMARY

MECHANICAL SYSTEMS, SERVICE SYSTEMS AND EQUIPMENT

Thermal Zone
winter dry bulb: N/A
summer dry bulb: ____

Interior design conditions
winter dry bulb: N/A
summer dry bulb: ____
relative humidity: ____

Building heating load: N/A

Building cooling load: N/A

Mechanical Spacing Conditioning System
Unitary
description of unit: N/A
heating efficiency: N/A
cooling efficiency: N/A
size category of unit: N/A
Boiler
Size category. If oversized, state reason: N/A
Chiller
Size category. If oversized, state reason: ____

List equipment efficiencies: N/A

ELECTRICAL SUMMARY

ELECTRICAL SYSTEM AND EQUIPMENT

Method of Compliance
Energy Code: ☐ Prescriptive ☐ Performance
ASHRAE 90.1: ☐ Prescriptive ☐ Performance

Lighting schedule (each fixture type)
lamp type required in fixture
number of lamps in fixture
ballast type used in the fixture
number of ballasts in fixture
total wattage per fixture
total interior wattage specified vs. allowed (whole building or space by space)
total exterior wattage specified vs. allowed

Additional Prescriptive Compliance
☐ 506.2.1 More Efficient Mechanical Equipment
☐ 506.2.2 Reduced Lighting Power Density
☐ 506.2.3 Energy Recovery Ventilation Systems
☐ 506.2.4 Higher Efficiency Service Water Heating
☐ 506.2.5 On-Site Supply of Renewable Energy
☐ 506.2.6 Automatic Daylighting Control Systems

N/A NOT A BUILDING

2012 NC Administrative Code and Policies

APPENDIX B
SCALE: N.T.S.

PLANS PREPARED FOR:
CROWN CASTLE
3530 TORINGDON WAY, ST 300
CHARLOTTE, NC 28277

PLANS PREPARED BY:
TOWER ENGINEERING PROFESSIONALS
326 TRYON ROAD
RALEIGH, NC 27603
OFFICE: (919) 661-6351
FAX: (919) 661-6350
N.C. LICENSE # C-1794

SEAL:
NORTH CAROLINA PROFESSIONAL SEAL 035734 ENGINEER GRAHAM M. ANDRES
September 2, 2015

REV	DATE	ISSUED FOR:
2	09-02-15	CONSTRUCTION
1	03-24-15	CONSTRUCTION
0	03-20-15	PRELIMINARY

DRAWN BY: MAW CHECKED BY: SCB

PROJECT INFORMATION:
WWYD
VZW ID: 29077
CROWN ID: 816290
7109 TEN TEN ROAD
APEX, NC 27502
(WAKE COUNTY)

SHEET TITLE:
APPENDIX B

SHEET NUMBER: T-2
REVISION: 2
TEP #: 33415

NOTES:

1. SITE PLAN SHOWN BELOW TAKEN FROM INFORMATION PROVIDED BY WAKE COUNTY GIS MAPS. CONTRACTOR TO VERIFY ALL EXISTING INFORMATION IS AS INDICATED ON SITE PLAN. CONTRACTOR IS TO ESTABLISH THE EXISTENCE AND LOCATION OF ALL EXISTING OVERHEAD AND UNDERGROUND UTILITIES. IMMEDIATELY NOTIFY THE CONSTRUCTION MANAGER OF ANY DISCREPANCIES.
2. EXISTING INFORMATION INDICATED ON THE SITE PLAN WAS REPRODUCED FROM MAPS TAKEN FROM WAKE COUNTY GIS MAPS. TEP DOES NOT GUARANTEE, OR ENSURE THE PRECISION, ACCURACY, OR CORRECTNESS AND ASSUMES NO RESPONSIBILITY OR LIABILITY FOR DAMAGES, LOSS OF REVENUE, OR INJURY THAT MIGHT OCCUR. THE INFORMATION SUPPLIED BY THE CUSTOMER WAS INCORPORATED FOR REFERENCE ONLY.

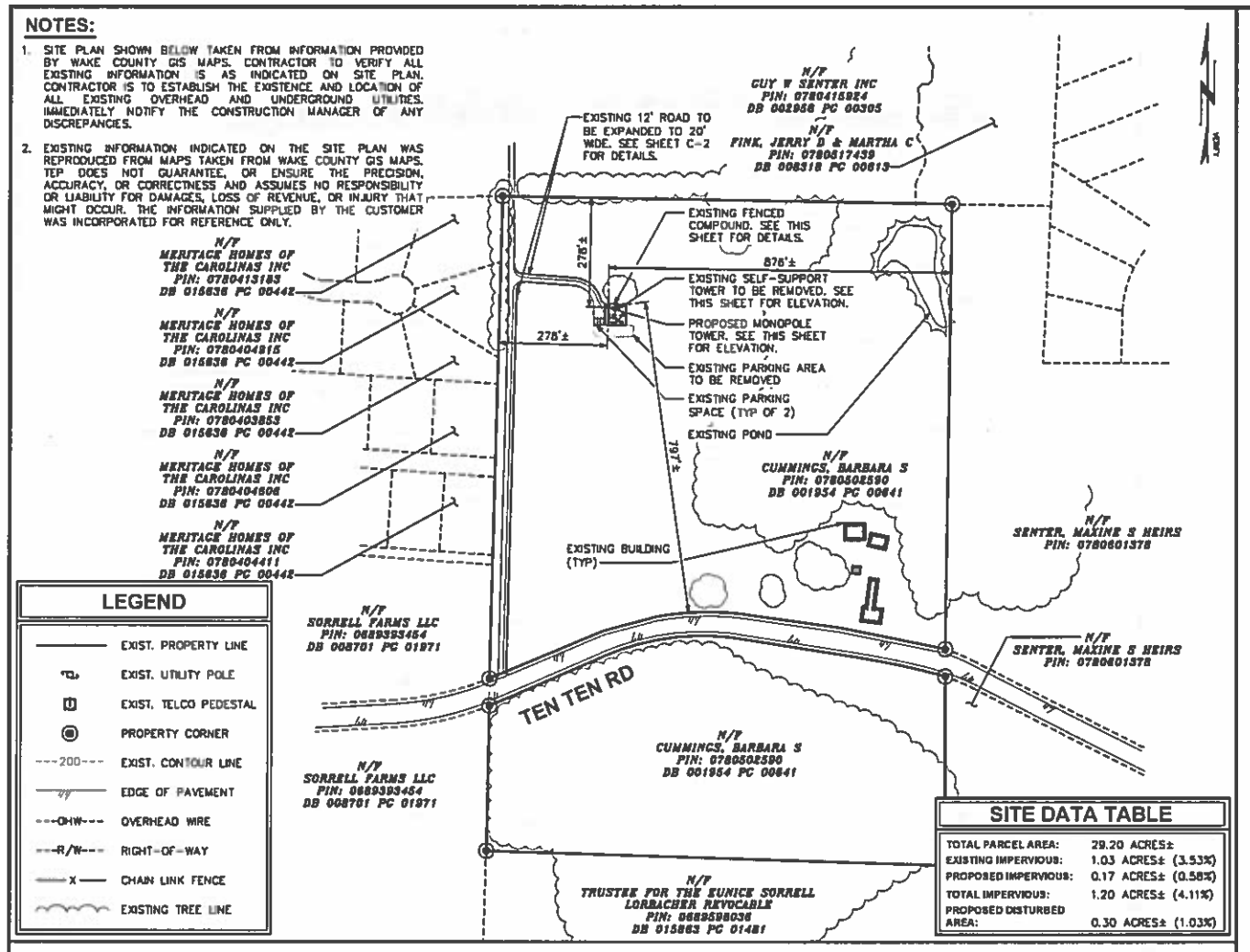

LEGEND

- EXIST. PROPERTY LINE
- EXIST. UTILITY POLE
- EXIST. TELCO PEDESTAL
- PROPERTY CORNER
- EXIST. CONTOUR LINE
- EDGE OF PAVEMENT
- OVERHEAD WIRE
- RIGHT-OF-WAY
- CHAIN LINK FENCE
- EXISTING TREE LINE

SITE DATA TABLE

TOTAL PARCEL AREA:	29.20 ACRES±
EXISTING IMPERVIOUS:	1.03 ACRES± (3.53%)
PROPOSED IMPERVIOUS:	0.17 ACRES± (0.58%)
TOTAL IMPERVIOUS:	1.20 ACRES± (4.11%)
PROPOSED DISTURBED AREA:	0.30 ACRES± (1.03%)

SITE PLAN

SCALE: 1" = 200'

0 200 400
SCALE IN FEET

NOTE:

SITE PLAN SHOWN BELOW TAKEN FROM INFORMATION PROVIDED BY CROWN CASTLE. CONTRACTOR TO VERIFY ALL EXISTING INFORMATION IS AS INDICATED ON SITE PLAN. CONTRACTOR IS TO ESTABLISH THE EXISTENCE AND LOCATION OF ALL EXISTING OVERHEAD AND UNDERGROUND UTILITIES. IMMEDIATELY NOTIFY THE CONSTRUCTION MANAGER OF ANY DISCREPANCIES.

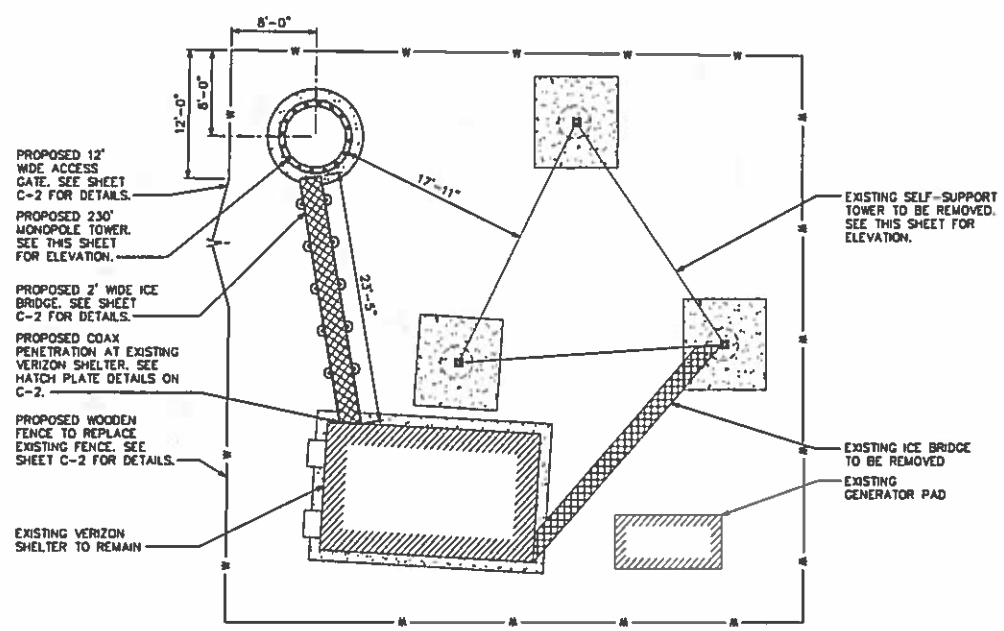

COMPOUND DETAIL

SCALE: 1/8" = 1'-0"

0 8 16
SCALE IN FEET

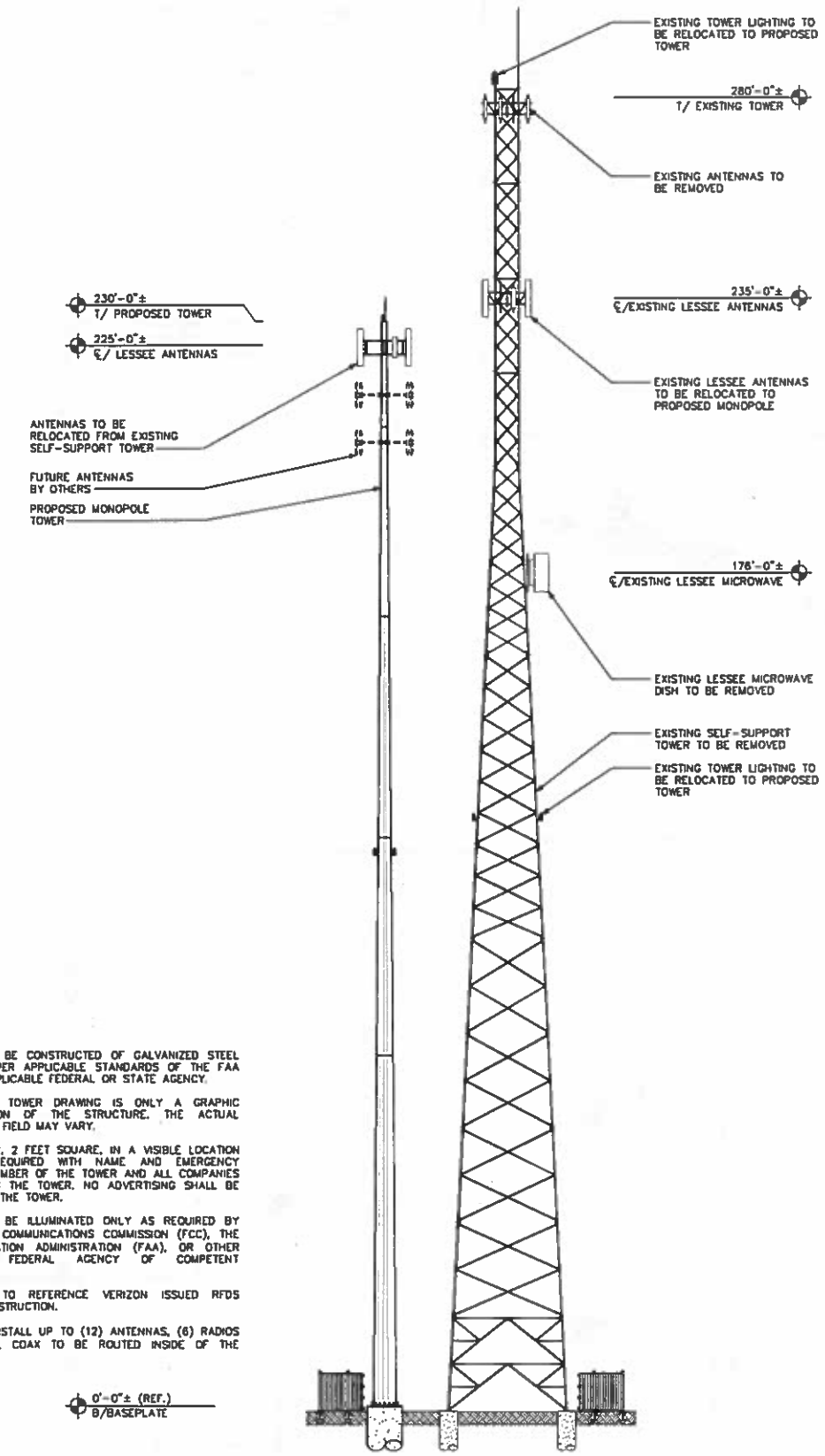

NOTES:

1. TOWER SHALL BE CONSTRUCTED OF GALVANIZED STEEL OR PAINTED PER APPLICABLE STANDARDS OF THE FAA OR OTHER APPLICABLE FEDERAL OR STATE AGENCY.
2. THE EXISTING TOWER DRAWING IS ONLY A GRAPHIC REPRESENTATION OF THE STRUCTURE. THE ACTUAL TOWER IN THE FIELD MAY VARY.
3. A SINGLE SIGN, 2 FEET SQUARE, IN A VISIBLE LOCATION SHALL BE REQUIRED WITH NAME AND EMERGENCY TELEPHONE NUMBER OF THE TOWER AND ALL COMPANIES OPERATING ON THE TOWER. NO ADVERTISING SHALL BE ATTACHED TO THE TOWER.
4. TOWER SHALL BE ILLUMINATED ONLY AS REQUIRED BY THE FEDERAL COMMUNICATIONS COMMISSION (FCC), THE FEDERAL AVIATION ADMINISTRATION (FAA), OR OTHER STATE OR FEDERAL AGENCY OF COMPETENT JURISDICTION.
5. CONTRACTOR TO REFERENCE VERIZON ISSUED RFDS PRIOR TO CONSTRUCTION.
6. VERIZON TO INSTALL UP TO (12) ANTENNAS, (6) RADIOS & (14) COAX. COAX TO BE ROUTED INSIDE OF THE TOWER.

TOWER ELEVATION

SCALE: 1/16" = 1'-0"

0 16 32
SCALE IN FEET

PLANS PREPARED FOR:
CROWN CASTLE
3530 TORINGDON WAY, ST 300
CHARLOTTE, NC 28277

PLANS PREPARED BY:
TOWER ENGINEERING PROFESSIONALS
326 TRYON ROAD
RALEIGH, NC 27603
OFFICE: (919) 661-6351
FAX: (919) 661-6350
N.C. LICENSE # C-1784

SEAL:
NORTH CAROLINA PROFESSIONAL SEAL 035734 ENGINEER GRAHAM M. ANDRES
September 2, 2015

REV	DATE	ISSUED FOR:
2	03-02-15	CONSTRUCTION
1	03-24-15	CONSTRUCTION
0	03-20-15	PRELIMINARY

DRAWN BY: MAW | CHECKED BY: SCB

PROJECT INFORMATION:
WWYD
VZW ID: 29077
CROWN ID: 816290
7109 TEN TEN ROAD
APEX, NC 27502
(WAKE COUNTY)

SHEET TITLE:
SITE PLAN & TOWER ELEVATION

SHEET NUMBER: C-1
REVISION: 2
TEP #: 33415

ELECTRICAL NOTES:

SCOPE:

1. SHALL INCLUDE ALL LABOR, MATERIALS AND APPLIANCES REQUIRED FOR THE FURNISHING, INSTALLING AND TESTING, COMPLETE AND READY FOR OPERATION OF ALL WORK SHOWN ON THE DRAWING AS SPECIFIED HEREIN:
   1. ELECTRIC SERVICE
   2. CONDUIT AND RACEWAY
   3. CONDUCTORS
   4. MISCELLANEOUS MATERIALS
   5. TELEPHONE CONDUITS
   6. LIGHTNING ARRESTING SYSTEM

CODES

1. THE INSTALLATION SHALL COMPLY WITH ALL APPLICABLE LAWS AND CODES. THESE INCLUDE BUT ARE NOT LIMITED TO THE LATEST EDITIONS OF:
   A. THE NATIONAL ELECTRICAL SAFETY CODE
   B. THE NATIONAL ELECTRIC CODE – NFPA-70
   C. THE INTERNATIONAL ELECTRIC CODE – IEC
   D. LOCAL AND STATE AMENDMENTS
   E. REGULATIONS OF THE SERVING UTILITY COMPANY
   F. NCEC
2. ALL PERMITS REQUIRED SHALL BE OBTAINED BY THE CONTRACTOR.
3. AFTER COMPLETION AND FINAL INSPECTION OF THE WORK, THE OWNER SHALL BE FURNISHED A CERTIFICATE OF COMPLETION AND APPROVAL.

TESTING

1. UPON COMPLETION OF THE INSTALLATION, OPERATE AND ADJUST ALL EQUIPMENT AND SYSTEMS TO MEET SPECIFIED PERFORMANCE REQUIREMENTS. ALL TESTING SHALL BE DONE BY QUALIFIED PERSONNEL.

GUARANTEE

1. IN ADDITION TO THE GUARANTEE OF THE EQUIPMENT BY THE MANUFACTURER, EACH PIECE OF EQUIPMENT SPECIFIED HEREIN SHALL ALSO BE GUARANTEED FOR DEFECTS OF MATERIAL OR WORKMANSHIP OCCURRING DURING A PERIOD OF ONE (1) YEAR FROM FINAL ACCEPTANCE OF THE WORK BY THE OWNER, WITHOUT EXPENSE TO THE OWNER ALL WARRANTEE CERTIFICATES & GUARANTEES FURNISHED BY THE MANUFACTURERS SHALL BE TURNED OVER TO THE OWNER.

CO-ORDINATION:

1. CONTRACTOR SHALL COORDINATE ALL WORK WITH THE POWER AND TELEPHONE COMPANIES AND SHALL COMPLY WITH ALL SERVICE REQUIREMENTS OF EACH UTILITY COMPANY.

EXAMINATION OF SITE

1. PRIOR TO BEGINNING WORK, THE CONTRACTOR SHALL VISIT THE SITE OF THE JOB AND SHALL FAMILIARIZE HIMSELF WITH ALL CONDITIONS AFFECTING THE PROPOSED ELECTRICAL INSTALLATION AND SHALL MAKE PROVISIONS AS TO THE COST THEREOF. FAILURE TO COMPLY WITH THE INTENT OF THIS PARAGRAPH WILL IN NO WAY RELIEVE THE CONTRACTOR OF PERFORMING ALL WORK NECESSARY FOR A COMPLETE AND WORKING SYSTEM OR SYSTEMS.

CUTTING, PATCHING AND EXCAVATION:

1. COORDINATION OF ALL SLEEVES, CHASES, ETC., WILL BE REQUIRED PRIOR TO THE CONSTRUCTION OF ANY PORTION OF THE WORK. ALL CUTTING AND PATCHING OF WALLS, PARTITIONS, FLOORS, AND CHASES IN CONCRETE, WOOD, STEEL OR MASONRY SHALL BE DONE AS PROVIDED ON THE DRAWINGS.
2. ALL NECESSARY EXCAVATIONS AND BACKFILLING INCIDENTAL TO THE WORK UNLESS SPECIFICALLY NOTED OTHERWISE ON THE DRAWING SHALL BE PROVIDED BY THIS CONTRACTOR.
3. SEAL ALL PENETRATION THROUGH WALL AND FLOORS WITH APPROVED GROUT.

EXTERIOR CONDUIT:

1. ALL EXPOSED CONDUIT SHALL BE NEATLY INSTALLED AND RUN PARALLEL OR PERPENDICULAR TO STRUCTURAL ELEMENTS. SUPPORTS AND MOUNTING HARDWARE SHALL BE HOT DIPPED GALVANIZED STEEL.

RACEWAYS

1. ALL CONDUCTORS SHALL BE INSTALLED IN CONDUIT. ALL CONDUIT SHALL BE RIGID STEEL, EMT OR SCH40 PVC AS INDICATED ON THE DRAWINGS.
2. WHERE INSTALLED ON EXTERIORS AND EXPOSED TO DAMAGE, ALL CONDUIT SHALL BE RIGID STEEL. ALUMINUM CONDUIT SHALL NOT BE ALLOWED.
3. CONCEALED CONDUIT IN WALLS OR INTERIOR SPACES ABOVE GRADE MAY BE EMT.
4. UNDERGROUND CONDUITS SHALL BE RIGID STEEL OR SCHEDULE 40 PVC AS INDICATED ON THE DRAWINGS.
5. ALL CONDUIT RUNS SHALL USE APPROVED COUPLINGS AND CONNECTORS. PROVIDE INSULATED BUSHING FOR ALL CONDUIT TERMINATIONS. ALL CONDUIT RUNS IN A WET LOCATION SHALL HAVE WATERPROOF FITTINGS.
6. PROVIDE SUPPORTS FOR ALL CONDUITS IN ACCORDANCE WITH NEC REQUIREMENTS. ALL CONDUITS SHALL BE SIZED AS REQUIRED BY NEC.
7. BURIAL DEPTH OF ALL CONDUITS SHALL BE AS REQUIRED BY CODE FOR EACH SPECIFIC CONDUIT TYPE AND APPLICATION.
8. CONDUIT ROUTES ARE SCHEMATIC. CONTRACTOR SHALL FIELD VERIFY BEFORE BID. COORDINATE ROUTE WITH WIRELESS CARRIER AND BUILDING OWNER.

EQUIPMENT:

1. ALL DISCONNECT SWITCHES SHALL BE SERVICE ENTRANCE RATED, HEAVY DUTY TYPE.
2. NEW CIRCUIT BREAKERS SHALL BE RATED TO WITHSTAND THE MAXIMUM AVAILABLE FAULT CURRENT AS DETERMINED BY THE LOCAL UTILITY. CONTRACTOR SHALL VERIFY MAXIMUM AVAILABLE FAULT CURRENT, AND COORDINATE INSTALLATION WITH THE LOCAL UTILITY BEFORE STARTING WORK.

CONDUCTORS

1. FURNISH AND INSTALL CONDUCTORS CALLED FOR IN THE DRAWINGS. ALL CONDUCTORS SHALL HAVE TYPE THHN (MIN) (75° C) INSULATION, RATED FOR 600 VOLTS.
2. ALL CONDUCTORS SHALL BE COPPER. THE USE OF ALUMINUM CONDUCTORS SHALL NOT BE ALLOWED. ALL CONDUCTORS SHALL BE UL LISTED AND SHALL BE PROVIDED AND INSTALLED AS FOLLOWS:
   A. MINIMUM WIRE SIZE SHALL BE #12 AWG.
   B. ALL CONDUCTORS SIZE #8 AND LARGER SHALL BE STRANDED. CONDUCTORS SIZED #10 AND SMALLER MAY BE SOLID OR STRANDED.
   C. CONNECTION FOR #10 AWG AND SMALLER SHALL BE BY TWISTING TIGHT AND INSTALLING INSULATED PRESSURE OR WIRE NUT CONNECTIONS.
   D. CONNECTION FOR #8 AWG AND LARGER SHALL BE BY USE OF STEEL CRIMP-ON SLEEVES WITH NYLON INSULATOR.
3. ALL CONDUCTORS SHALL BE COLOR CODED IN ACCORDANCE WITH NEC STANDARDS.
4. THE RACEWAY SYSTEM SHALL BE COMPLETE BEFORE INSTALLING CONDUCTORS

PENETRATIONS:

1. CONTRACTOR SHALL COMPLY WITH UL PENETRATION DETAILS FOR PENETRATIONS OF ALL RATED WALLS, ROOF, ETC.

GROUNDING

1. ALL ELECTRICAL NEUTRALS, RACEWAYS AND NON-CURRENT CARRYING PARTS OF ELECTRICAL EQUIPMENT AND ASSOCIATED ENCLOSURES SHALL BE GROUNDED IN ACCORDANCE WITH NEC ARTICLE 250. THIS SHALL INCLUDE NEUTRAL CONDUCTORS, CONDUITS, SUPPORTS, CABINETS, BOXES, GROUND BUSSES, ETC. THE NEUTRAL CONDUCTOR FOR EACH SYSTEM SHALL BE GROUNDED BY ONE POINT ONLY.
2. PROVIDE GROUND CONDUCTOR IN ALL RACEWAYS.
3. PROVIDE BONDING AND GROUND TO MEET NFPA 780 – LIGHTNING PROTECTION AS A MINIMUM.
4. PROVIDE GROUNDING SYSTEM AS INDICATED ON THE DRAWINGS, AS REQUIRED BY THE NATIONAL ELECTRIC CODE AND RADIO EQUIPMENT MANUFACTURER.

ABBREVIATIONS AND LEGEND

A	AMPERE	PVC	SCH40 RIGID NON-METALLIC CONDUIT
AFG	ABOVE FINISHED GRADE	RGS	RIGID GALVANIZED STEEL CONDUIT
ATS	AUTOMATIC TRANSFER SWITCH	SW	SWITCH
AWG	AMERICAN WIRE GAUGE	TGB	TOWER GROUND BAR
BCW	BARE COPPER WIRE	UL	UNDERWRITERS LABORATORIES
BFG	BELOW FINISHED GRADE	V	VOLTAGE
BKR	BREAKER	W	WATTS
C	CONDUIT	XFMR	TRANSFORMER
CKT	CIRCUIT	XMTR	TRANSMITTER
DISC	DISCONNECT		
EGR	EXTERNAL GROUND RING		
EMT	ELECTRIC METALLIC TUBING		
FSC	FLEXIBLE STEEL CONDUIT		
GEN	GENERATOR		
GPS	GLOBAL POSITIONING SYSTEM		
GRD	GROUND		
IGB	ISOLATED GROUND BAR		
IGR	INTERIOR GROUND RING (HALO)		
KW	KILOWATTS		
NEC	NATIONAL ELECTRIC CODE		
PCS	PERSONAL COMMUNICATION SYSTEM		
PH	PHASE		
PNL	PANEL		
PNLBD	PANELBOARD		

------E------	UNDERGROUND ELECTRICAL CONDUIT
------T------	UNDERGROUND TELEPHONE CONDUIT
	KILOWATT-HOUR METER
	UNDERGROUND BONDING AND GROUNDING CONDUCTOR.
	GROUND ROD
	CADWELD
	GROUND ROD WITH INSPECTION WELL

ELECTRICAL NOTES

SCALE: N.T.S.

GROUNDING NOTES

1. GROUNDING ELECTRODES SHALL BE CONNECTED IN A RING USING #2 AWG BARE TINNED COPPER WIRE. THE TOP OF THE GROUND RODS AND THE RING CONDUCTOR SHALL BE 30" BELOW FINISHED GRADE. GROUNDING ELECTRODES SHALL BE DRIVEN ON 15'-0" CENTERS (MAX).
2. BONDING OF THE GROUNDED CONDUCTOR (NEUTRAL) AND THE GROUNDING CONDUCTOR SHALL BE AT THE SERVICE DISCONNECTING MEANS. BONDING JUMPER SHALL BE INSTALLED PER N.E.C. ARTICLE 250.30.
3. CONTRACTOR SHALL NOTIFY THE CONSTRUCTION MANAGER WHEN THE GROUNDING SYSTEM IS COMPLETE. THE CONSTRUCTION MANAGER SHALL INSPECT THE GROUNDING SYSTEM PRIOR TO BACKFILLING.

DRAWING NOTES:

1. PROPOSED TOWER GROUND RING
2. GROUNDING TO FENCE
3. ⅝"×10' COPPER GROUND ROD (TYP)
4. SERVICE ENTRANCE GROUND ROD W/ INSPECTION WELL
5. CADWELD
6. CONNECT TO EXISTING GROUND RING. CONTRACTOR TO VERIFY EXISTENCE AND LOCATION.
7. #2 TINNED SOLID COPPER GROUND WIRE FROM GROUND BAR TO TOWER GROUND RING
8. TOWER GROUND RING TO TOWER
9. PROPOSED TOWER GROUND BAR
10. ICE BRIDGE SUPPORT BONDING CONDUCTOR. #2 COPPER CONDUCTOR-BARE TINNED BURIED 30" BFG (TYP).

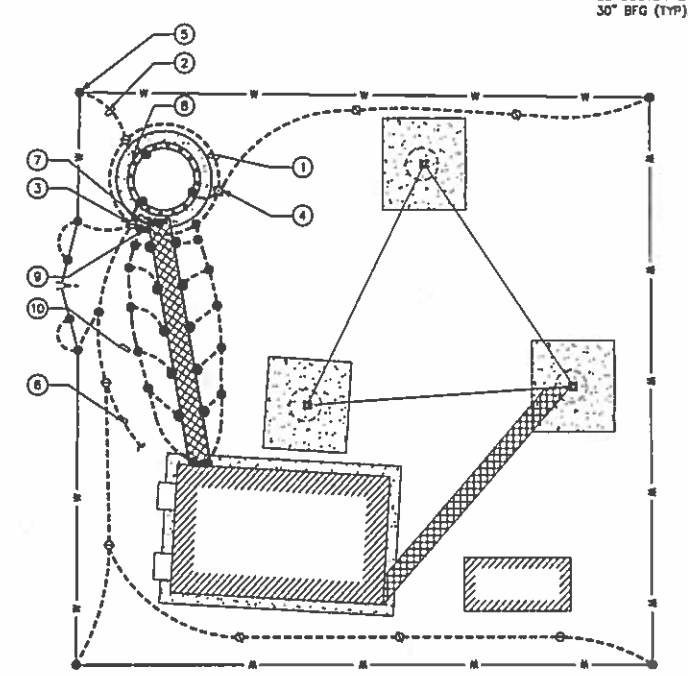

EQUIPMENT GROUNDING PLAN

SCALE: ⅛" = 1'-0"

0 8 16
SCALE IN FEET

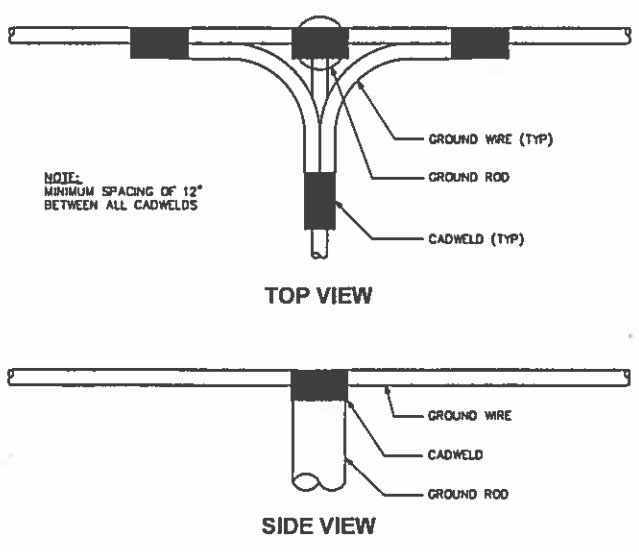

CADWELD GROUNDING DETAIL

SCALE: N.T.S.

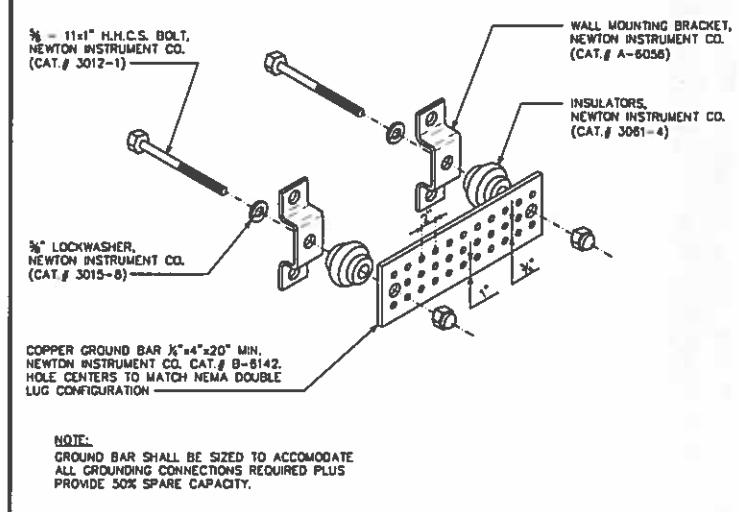

STANDARD GROUND BAR DETAIL

SCALE: N.T.S.

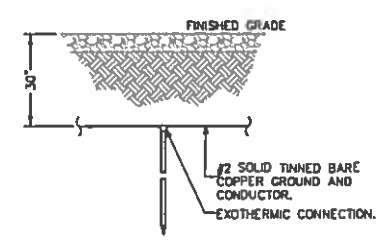

GROUND ROD DETAIL

SCALE: N.T.S.

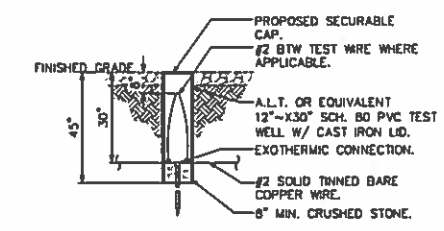

ACCESS WELL DETAIL

SCALE: N.T.S.

PLANS PREPARED FOR:
CROWN CASTLE
3530 TORNICHON WAY, ST. 300
CHARLOTTE, NC 28277

PLANS PREPARED BY:
TOWER ENGINEERING PROFESSIONALS
326 TRYON ROAD
RALEIGH, NC 27603
OFFICE: (919) 661-6351
FAX: (919) 661-6350
N.C. LICENSE # C-1784

SEAL:
SEAL 042109 ENGINEER
September 2, 2015

REV	DATE	DRAWN BY:	CHECKED BY:
2	09-02-15	CONSTRUCTION	
1	03-24-15	CONSTRUCTION	
0	03-20-15	PRELIMINARY	

ISSUED FOR:

PROJECT INFORMATION:
WWYD
VZW ID: 29077
CROWN ID: 816290
7109 TEN TEN ROAD
APEX, NC 27502
(WAKE COUNTY)

SHEET TITLE:
ELECTRICAL NOTES, GROUNDING PLAN & DETAILS

REVISION: 2

SHEET NUMBER: E-1

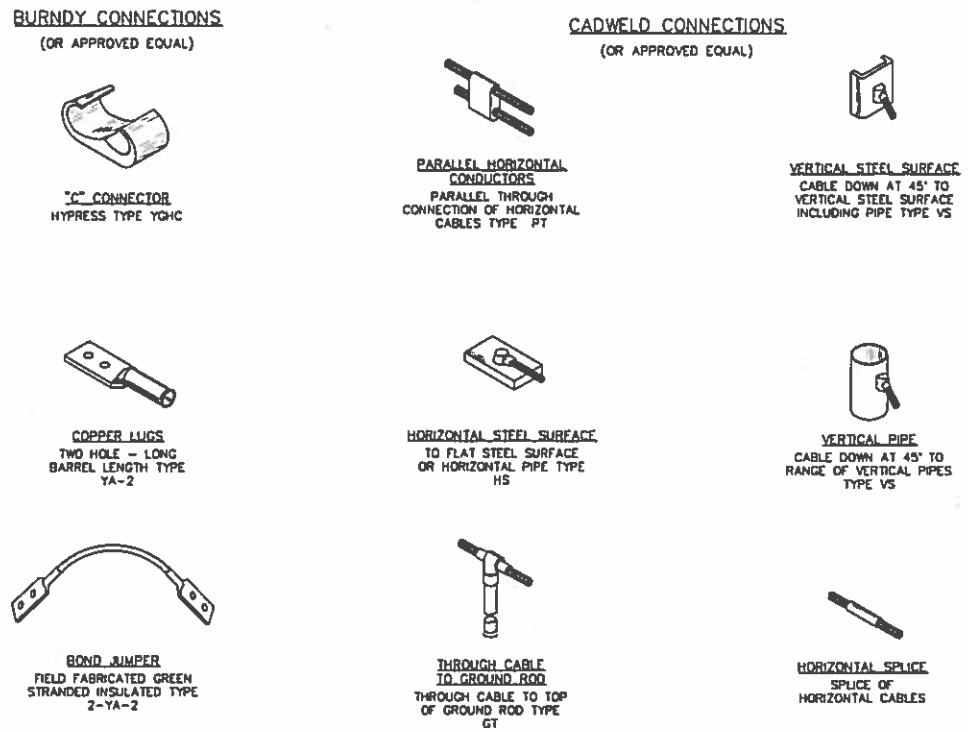

TYPICAL WELDING CONNECTIONS

SCALE: N.T.S.

NOTES:

1. MINIMUM BEND RADIUS OF #2 SOLID CONDUCTOR IS 12".
2. ALL GROUND BARS SHALL BE INSTALLED WITH TAMPER RESISTANT MOUTING HARDWARE.

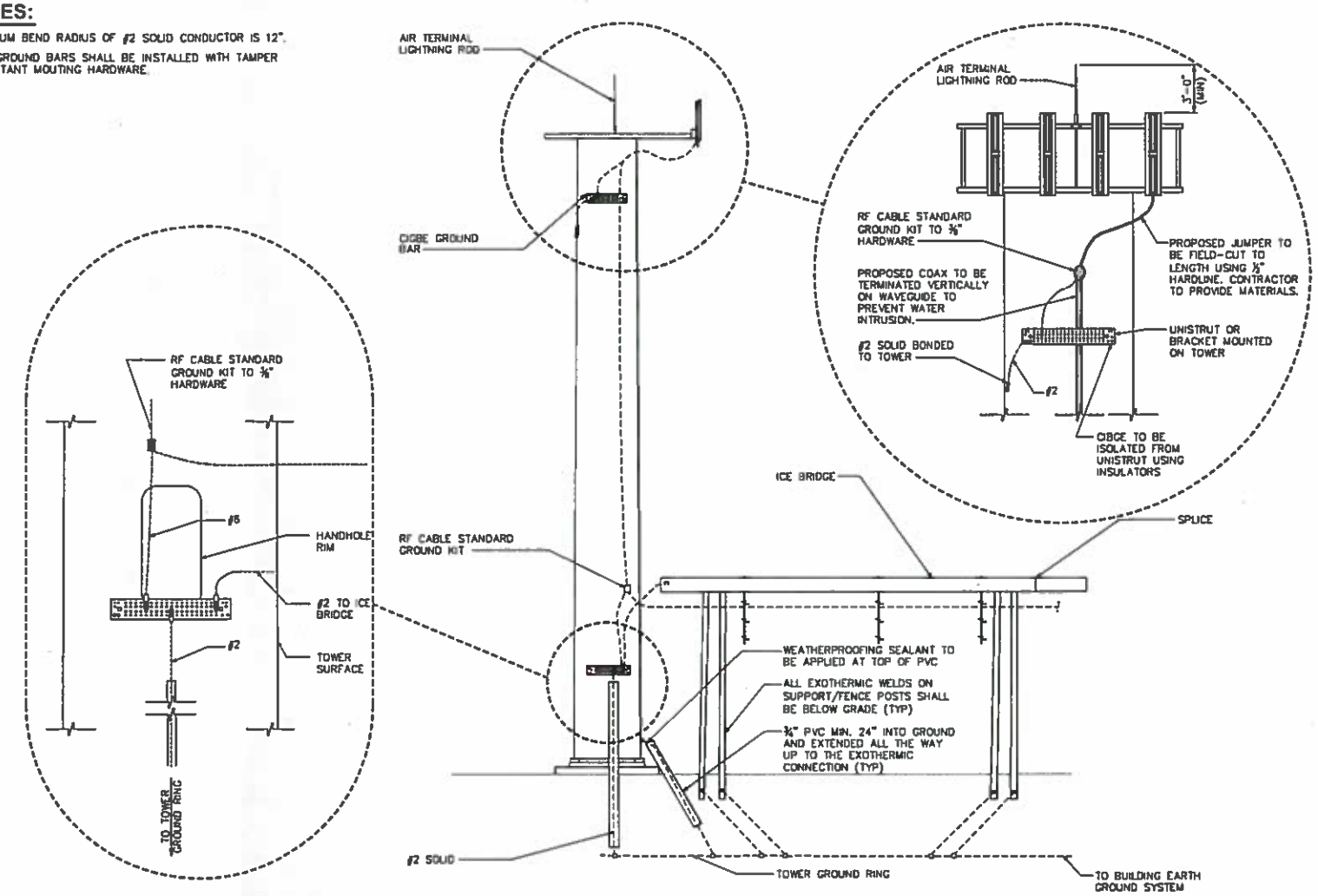

ICE BRIDGE, COAX, STANCHION, AND TOWER GROUNDING DETAIL

SCALE: N.T.S.

NOTE:

ALL GROUNDING LEADS THAT COME ABOVE GROUND NEED TO BE #2 SOLID COPPER TIN IN A PIECE OF FLEX CONDUIT.

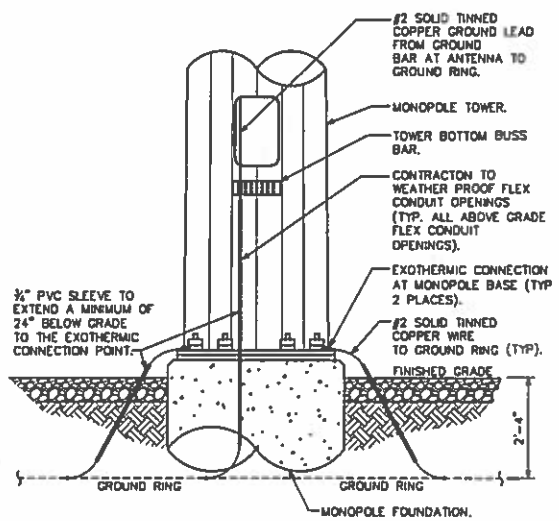

GROUNDING AT TOWER BASE

SCALE: N.T.S.

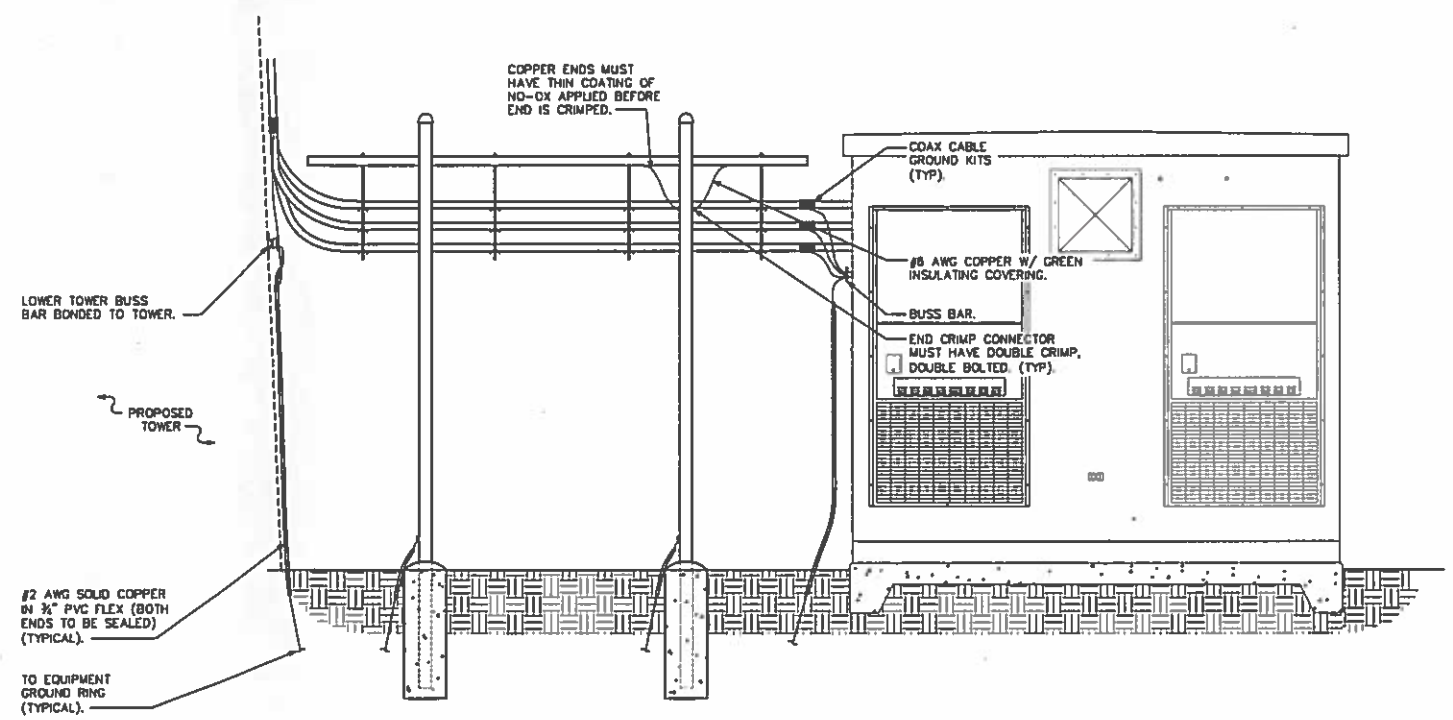

ICE BRIDGE GROUNDING DETAILS

SCALE: N.T.S.

PLANS PREPARED FOR:
CROWN CASTLE
3530 TOWNSDOWN WAY, ST. 300
CHARLOTTE, NC 28277

PLANS PREPARED BY:
TOWER ENGINEERING PROFESSIONALS
326 TRYON ROAD
RALEIGH, NC 27603
OFFICE: (919) 661-6351
FAX: (919) 661-6350
N.C. LICENSE # C-1794

SEAL:
SEAL 042109 ENGINEER
September 2, 2015

REV	DATE	ISSUED FOR:
2	09-02-15	CONSTRUCTION
1	03-24-15	CONSTRUCTION
0	03-20-15	PRELIMINARY

DRAWN BY: MAW
CHECKED BY: SCD

PROJECT INFORMATION:
WWYD
VZW ID: 29077
CROWN ID: 816290
7109 TEN TEN ROAD
APEX, NC 27502
(WAKE COUNTY)

SHEET TITLE:
GROUNDING DETAILS

REVISION: 2
TEP # 33415

SHEET NUMBER:
E-2